HSK Kunststoff Schweisstechnik GmbH
HSK plastic welding technology GmbH

OPERATING AND MAINTENANCE INSTRUCTION
WELDING EXTRUDER SERIE
HSK35 RSX

table of contents Page

1.	General Information	3
2.	Technical Data	4
3.	Explanation of symbols	4
4.	Determination of use	4
4.1	general procedure description	5
4.2	Start-up	5
4.3	Handling of manual welding extruder	6
5.	Operating instructions for regulator CAL3200	8
5.1	Mounting of regulator	8
5.2	Setting of set-point temperature	9
5.3	Setting of air temperature	9
6.	Welding	9
7.	Cutting off of manual welding extruder	9
8.	Maintenance	10
8.1	Cleaning	10
8.2	Maintenance works	10
8.3	Change of die	11
8.4	Change of extruder screw	12
8.5	Change of welding nozzle	12
9.	Defects and their possible reason	13
10.	Spare parts list extruder	14
11.	Air heater	16
12.	Special accessories	17
13.	Wiring diagram	18
14.	Declaration of conformity	22

1. General Notes

The copyrights of this operating manual, including descriptions, drawings, and attachments, remain with HSK Kunststoff Schweißtechnik GmbH, Bad Honnef, and may not, without express permission, be reproduced or made accessible in whole or in part to third parties or competitors.

Before commissioning, it is essential to carefully read through these documents, as no liability can be assumed for personal injury or machine damage caused by improper handling.

This operating manual is designed for practical use and should be accessible to the operator at all times.

Please note: Before performing any repair or maintenance work on the hand welding extruder, the device must always be disconnected from the power supply.

When ordering spare parts, the following information is required:

- Machine number
- Unit (Extruder, Drive, or Air Heater)
- Item number according to the spare parts list

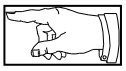

All necessary adjustments, and if required, interventions by a specialist, are described in this operating manual. Should any difficulties arise during commissioning despite this, please do not make any unauthorized manipulations to the device. Doing so endangers your health and your warranty claim!

Please contact your nearest sales branch or HSK Kunststoff Schweißtechnik GmbH (see p. 17).

2. Technical Data

- Supply voltage: 230 V / 50 Hz
- Air heating: 2.200 W
- Cylinder heating: 700 W
- Extruder drive: 1.200 W
- Air volume: min. 300 L/min at 0.6 bar (not applicable for version “RSX”)
- Maximum wire diameter: HSK35 – Ø5 mm

3. Explanation of Symbols

To mark particularly important information, the following symbols are used in this operating manual:

Safety-related note:

Maintenance-related note:

4. Intended Use

The HSK hand welding extruders are suitable for processing the following thermoplastic types:

- LDPE, HDPE, LLDPE, PP, PVDF

Excluded are filled or reinforced plastics or, in general, plastic types whose melt flow index MFI 190/5 < 0.5 g/10 min.

The processing of molding compounds that do not meet the above specification is not permitted, as there is a risk of damaging the machine.

In individual cases, the specification may be extended after consultation with the manufacturer or your authorized distributor.

When storing the heated or switched-on machine, always use the stand supplied. Please ensure that the machine rests securely in the stand and that the stand itself is stable.

The hand welding extruder must be stored in such a way that, when heated or switched on, it cannot come into contact with easily flammable or explosive materials.

4.1 General Process Description

Extrusion welding (see Fig. 1) is a manual or semi-mechanized welding process. Welding filler material, either in the form of wire (see feed, Fig. 2) or granulate, is melted and plasticized in a plasticizing system (extruder). Through a welding shoe shaped according to the seam geometry, the filler is pressed into the joint of the base material, which is usually preheated with hot air.

The material output of the machine or device determines the maximum weld seam dimension and influences the welding speed. The extruder's material output can also be controlled via the potentiometer on the drive.

The required joining pressure is generated by the exiting molten material and the counterforce of the welder.

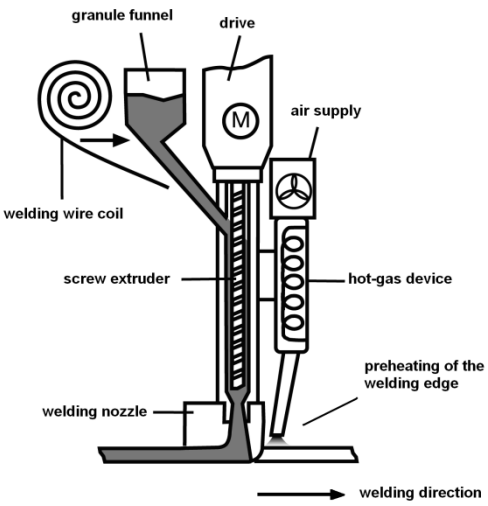

Fig.1

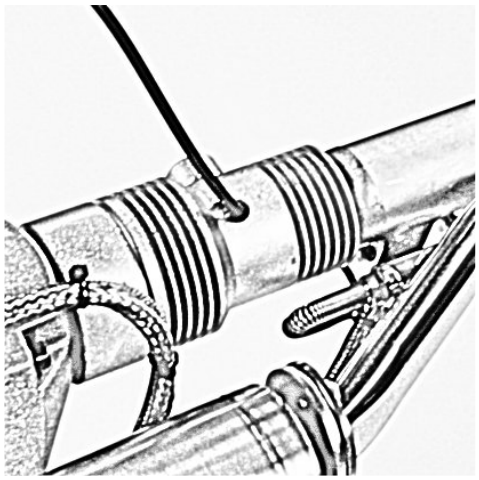

Fig.2

4.2 Commissioning

Before commissioning, ensure that the drive is switched off. Otherwise, unlock the drive ON/OFF switch.

Before heating up the hand welding extruder, the handle supplied must be mounted on the cylinder.

Then establish the air supply for the air heater (not applicable for version "RSX"). The air heater requires dry, dust-free air with the following specification:

- Volume flow > 300 l/min
- Absolute air pressure < 2 bar

Once the power supply is established by plugging in the mains plug, the heating of the hand welding extruder is automatically switched on.

This creates a burn hazard at the points marked in the following illustration.

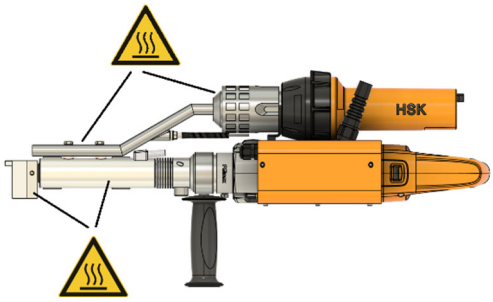

Ensure that there are no easily flammable or explosive materials in front of the preheating nozzle.

Check that the set melt temperature (see Chap. 5.2 for settings) is suitable for the material to be processed.

If the temperature is not appropriate for the material, there is a risk of damage to the machine and/or the weld material.

For HSK hand welding extruders with electronic melt temperature control, a minimum temperature of 180°C cannot be undercut.

This value can be modified in individual cases after consultation with the manufacturer or your authorized distributor.

Before feeding the welding wire, switch on the drive and feed the wire in with slight pressure.
Once the machine has gripped the welding wire, the feed is automatic.

4.3 Handling of the Hand Welding Extruder

The machine must be commissioned as described in Chap. 4.2 and may only be operated using the designated handles.

To avoid burns from improper handling, the operating personnel must wear heat-resistant gloves. In addition, all limbs of the operator must be covered with appropriate clothing.

When working overhead or in confined spaces (e.g., manholes, narrow containers), welding must, for safety reasons, always be performed in the presence of a second person.

Please note: An optimal weld seam can only be achieved with flawless welding wire, proper preheating, and good joint preparation.

Ensure that the welding wire used has been stored correctly and is not aged.

In addition to sufficient air quantity (see Chap. 2), the quality of the supplied air is also crucial for weld seam quality.

Optimum welding results are achieved by using dry and dust-free air.

Joint preparation depends on the materials to be welded and the seam geometry. Please refer to standard technical literature or the regulations applicable in your field for guidance on joint preparation.

The regulations that exist in many areas (e.g., DVS guidelines) for the production of plastic welds must be strictly observed.

5. Operating instructions for regulator CAL3200

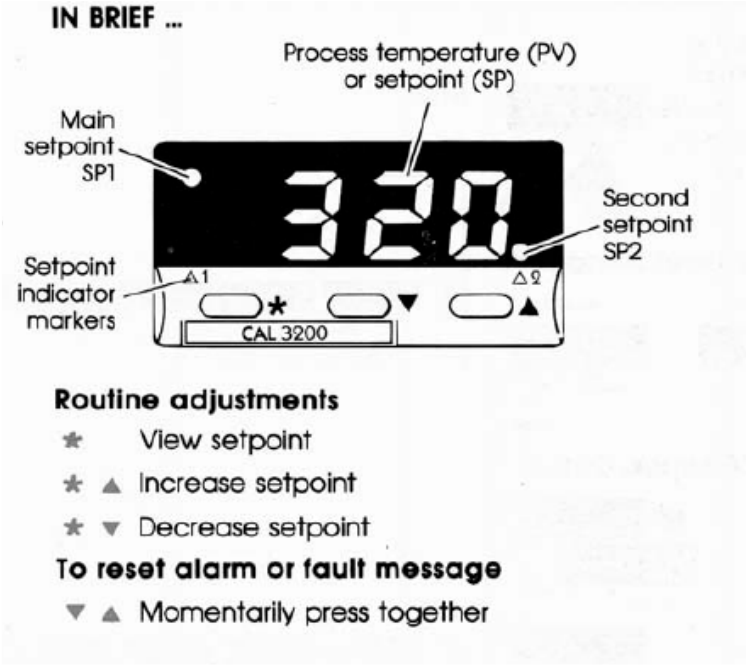

Mounting of regulator

At first please disconnect the manual welding extruder from the electrical network!

The regulator has to be inserted into the switchboard cut out from the front. Put the fastening frame from the rear and press it against the rear side of the switchboard. Afterwards insert the connector block into the regulator.

For taking the regulator out, first open the switch box.
Thereafter remove the contact strip. After removal of the fastening frame the regulator can be taken out of the switch box.

5.2 Setting of set-point temperature

The regulator is pre-adjusted at a set-point temperature of 220°C (mass temperature). This must be adapted by the operator to the material to be welded.

For the setting of the set-point temperature please proceed as follows:

The desired set-point temperature is shown in Display when you the * button of the regulator.
By actuating the " * and ▲" button the set-point temperature is raised.
By actuating the " * and ▼" button set-point temperature is reduced.

Never press the "▲" and the "▼" key at the same time.
By doing this, you will enter into a level of the regulator which can solely be modified by the servicing personnel.
By re-actuating the „▲"and the „▲"key you can return to the start position of the

5.3 Setting of air temperature

For the setting of the air temperature please proceed as described in item No. 5.2 but with regulator No. 1.

6. Welding

After set mass and air temperatures are reached the welding process can be started.

The temperatures to be applied will depend on the material to be welded and can be taken from the directions of the material's supplier.

The following standard processing temperatures have been taken out of the DVS directions 2207, part 4:

Material	Mass temperature (°C)	Air temperature (°C)	Air quantity (l/min)
HD-PE	200 – 230	250 – 300	≥ 300
PP	200 – 230	250 – 300	≥ 300

7. Cutting off of manual welding extruder

After completion of the welding procedure, always empty the extruder by keeping it running without welding wire until there is no more material coming out of the die. Thereafter you cut off the air heating with the switch (item no. 28). As soon as the air temperature is less than 100°C the air supply can be cut off.
After this the extruder can be cut off by pulling out the mains plug.

Attention:
If the air supply is cut off at the same time than the extruder or even before, the heater cartridge may be damaged.

8. Maintenance

General rules for all maintenance works:

Pull out mains plug!

Electrical parts to be cleaned without liquids!

Only use original spare parts!

During machine start-up, maintenance works as well as in continuous operation, the appropriate directions of employer's liability insurance association on the subject of accident prevention must be strictly followed.

Please check the connecting cable regularly in view of eventual damage!

We do not accept any liability for damage to persons or machine parts occurred by insufficient maintenance works or improper greasing.

Please take into consideration that regular and thorough maintenance will increase the lifetime of your manual welding extruder and avoid unnecessary standstills during production.

For all repairs at the electrical devices please refer to the high-voltage tests as per VDE 0740.

8.1 Cleaning

After 100 service hours or after 3 months at the latest the cooling slots at the motor housing must be cleaned and the motor blown out with dry compressed air.

8.2 Maintenance works

After 1.000 service hours or after 12 months at the latest the machine must be thoroughly cleaned, all gear parts and ball bearings washed with solvents and provided with fresh grease. The space between inner and outer ring of ball bearings may only be filled with grease at 1/3 to prevent bearings running hot. Only use special grease

brand FEIN, type 3 21 60 003 21 7

After 150 service hours the thrust bearing (item no. 15) of the extruder screw must be dismounted, cleaned and provided with fresh grease. For the lubrication of the thrust bearing only use

Total Multis Complex EP2

We recommend further eliminating eventually sticking deposits from the screw, for ex. by means of a brass brush. When cleaning the screw please take special care not to damage the chrome layer!

Also retighten all screw connections. Missing or faulty parts must be replaced immediately.

Replace carbon brushes not later than when reduced to 7 mm length. We recommend controlling the carbon brushes regularly every two weeks, as abrasion of these brushes heavily depends on the prevailing operating conditions.

After insertion of new brushes, it has to be checked whether they can be easily moved in their holding device.

If, even after insertion of now carbon brushes, a strong commutator sparking occurs within the collector area, the collector will have to be drawn off. Otherwise there is the danger of heavy wear on the carbon brushes.

⚠ WARNING – Electrical Safety
The power supply cable must be inspected regularly for any signs of damage.

⚠ CAUTION – Repairs and Servicing
Power tools may only be repaired, serviced, and tested by qualified electrical specialists (in accordance with VGB 4). Improper repairs may result in serious hazards for the operator.

⚠ NOTICE – Maintenance Responsibility
We do not accept liability for personal injury or equipment damage resulting from insufficient maintenance or inadequate lubrication.
Regular and thorough maintenance is essential to extend the service life of your hand welding extruder and to avoid unnecessary downtime during production.

8.3 Change of nozzle

Left-hand-threaded and danger of injury by burning!

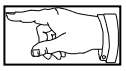

1. Heat up the machine for approx. 10 minutes.
2. Remove the welding shoe.
3. By means of a spanner, screw the nozzle (item 1) out of the extruder cylinder.
4. Screw the new nozzle into the extruder cylinder.
5. Loosen the nozzle by approx. half a rotation.
6. Tighten the die definitely after 5 minutes' time, otherwise there is the danger of damaging the brass threading of the nozzle.

8.4 Change of extruder screw

Only possible with heated screw and therefore danger of injury by burning!

1. Heat up the machine for approx. 10 minutes
2. Empty the machine
3. Pull out mains plug
4. Remove the die (see chapter 8.3)
5. Loosen the bolt (Item no. 23)
6. Pull off the cylinder from the drive engine in the direction of extrusion.
7. Remove the Seeger circlip ring (item no. 20) by means of special nippers for circlips, type i-2.
8. Now pull out the extruder screw with the thrust bearing to the rear side.
9. It is highly recommended, when changing the extruder screw to clean the thrustbearing and to regrease it with Total Multis Complex EP2
10. Now proceed with the re-assembly of the machine in the opposite order. When mounting the thrust bearing special care must be taken to mount first the bearing ring with the small boring, afterwards the ball bearing cage and finally the bearing ring with the big boring. Please see to it that the feather key of the driving engine and the groove of the extruder screw are in exact alignment.

8.5 Change of welding nozzle

The mounting or change of the welding nozzle may only be effected in heated condition.

Danger of injury by burning!

After loosening of the attachment screw (1) (see picture below)

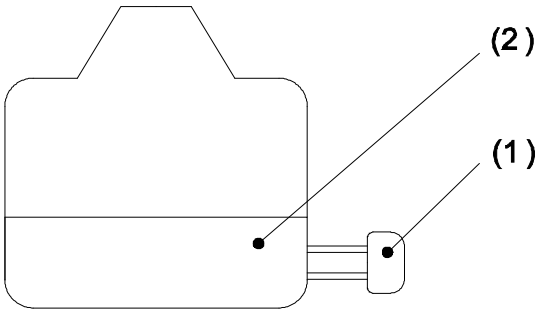

pull off the welding nozzle with an appropriate pair of nippers, slightly turning.

The nippers may only have contact with the aluminium base plate (2) of the welding nozzle, otherwise there is the danger of damaging the nozzle.

Please do not remove the welding shoe by pushing it off between heater band and welding nozzle with a sharp object.

In addition to damaging the manual welding extruder or the welding nozzle, there is the danger of electric shock.

After removal of the welding nozzle, the die and the aluminium base plate can be cleaned from adherent material deposits.

To this purpose employ a soft wire brush, for example out of brass.

After remounting and alignment of the welding nozzle please retighten the attachment screw (1) again, but only smoothly - just to keep the welding nozzle stable. If screw is retightened too much, the nozzle may be damaged. Once the system has cooled down, it is well possible that the welding nozzle sticks quite loose in its position. Discovering this, please do not tighten the attachment screw (1) because of the said reasons. The attachment screw (1) must only be retightened once the machine has been heated up again for further use.

9. Defects and their possible reason

Defects	Possible reasons
Machine doesn't discharge uniformly (is pumping) mainly occurs with PP	a): machine is overheated b): screw must be cleaned
Melt is interspersed with bubbles	a): melt temperature is too high b): welding wire is too old or too humid
Machine does not reach sufficient speed	a): melt temperature is too low b): heater band defective
Machine does not run smoothly	a): wear of carbon brushes b): fluctuations on the power supply
No means to regulate melt temperature	regulator or thermocouple defective
Set-point air temperature for preheating is not reached	a): cartridge heater defective b): electronics defective c): insufficient air quantity

10. Spare parts list extruder

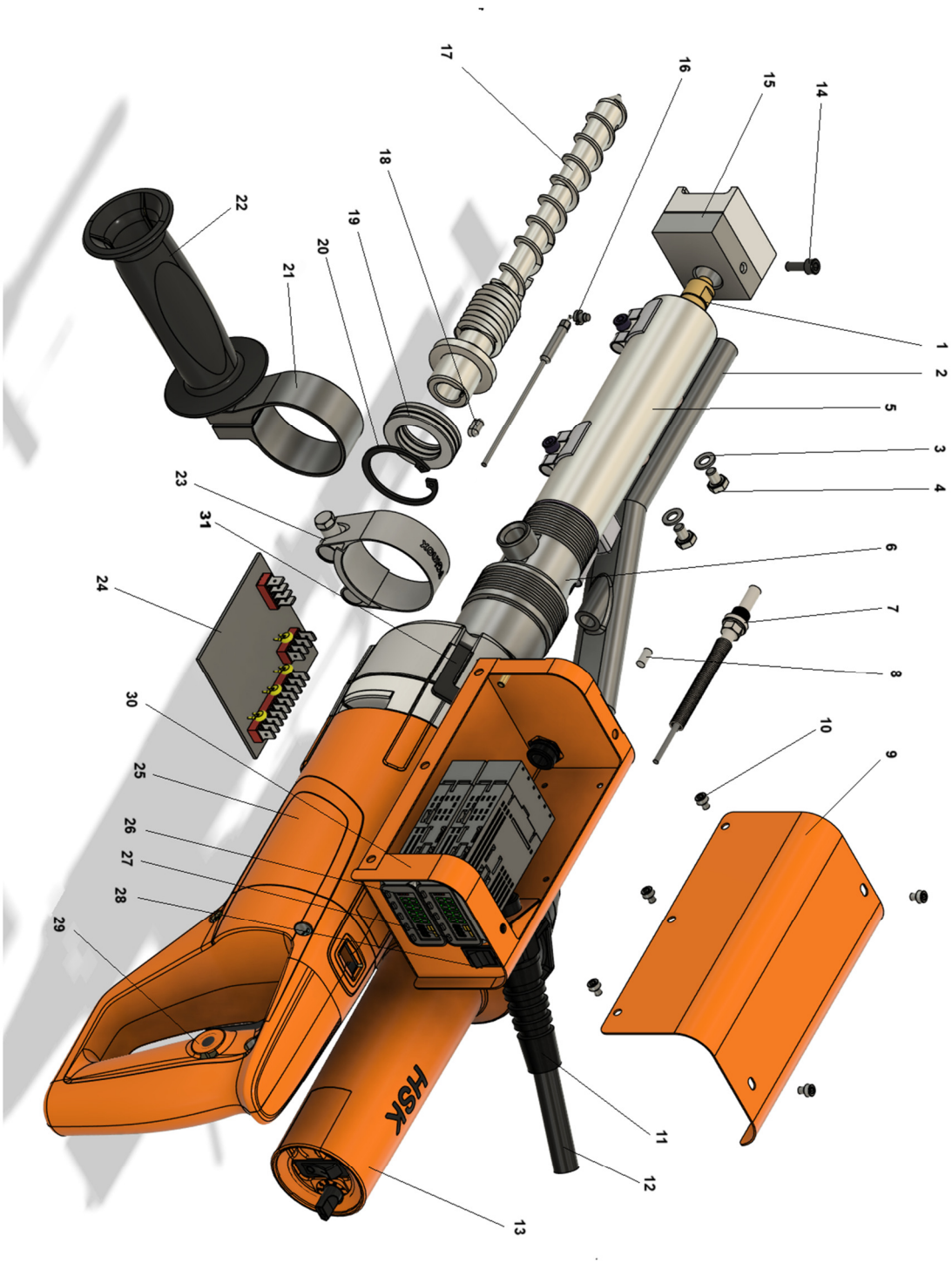

Ersatzteilliste für Handschweißextruder Serie HSK35 RSX				
Pos.	**Part number**	**Item description**	**Quantity**	**picture**
1.	100203	nozzle HSK08 - HSK40 new	1	
2.	02104	tube, oval, HSK28 RSX	1	
3.	110349	Flat washer for oval tube mounting	2	
4.	100075	screw M6*12 DIN 933	2	
5.	110239	Heater band	1	
6.	02048	cylinder	1	
7.	02076	Thermocouple air	1	
8.	02108	safety pin for cylinder	1	
9.	110274	Cover for controlbox, only available complete with controlbox	1	
10.	110344	Screws for controlbox	5	
11.	110281	cable protector HSK35 HT-K black RAL9005 M16x1,5	1	
12.	02066	Power cable	1	
13.	400175	preheater APX100-E RSX	1	
14.	100244	screw M5 for welding nozzle	1	
15.		Welding nozzle (depending on the application)	1	
16.	02066	Thermocouple melt	1	
17.	110294	screw HSK35, 5,3mm feeder	1	
18.	400068	Feather key screw gear locking	1	
19.	02027	Thrust bearing	1	
20.	02090	Safety ring Ø35	1	
21.	110328	Rotatable clamping element for M14 handle	1	
22.	02122	handle M14	1	
23.	02060	Clamping ring cylinder	1	
24.	02095	Control board control01	1	
25.	400159	drive BOS16, with speed control	1	
26.	110348	Temperature controller air CAL3200	1	
27.	110347	Temperature controller melt CAL3200	1	
28.	02022	on/off switch Heating element preheater	1	
29.	110345	on/off switch drive BOS16	1	
30.	110274	Controlbox, only complete with cover	1	
31.	110275	Holding device controlbox and preheater	1	
			1	
		Other spare parts not illustrated		
	110335	stand	1	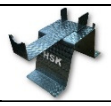
	400023	Oval tube extension Typ 60	1	
	400041	Oval tube widen Typ 45	1	
	110286	Brushes drive HSK35	2	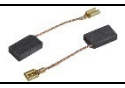

11. Air heater

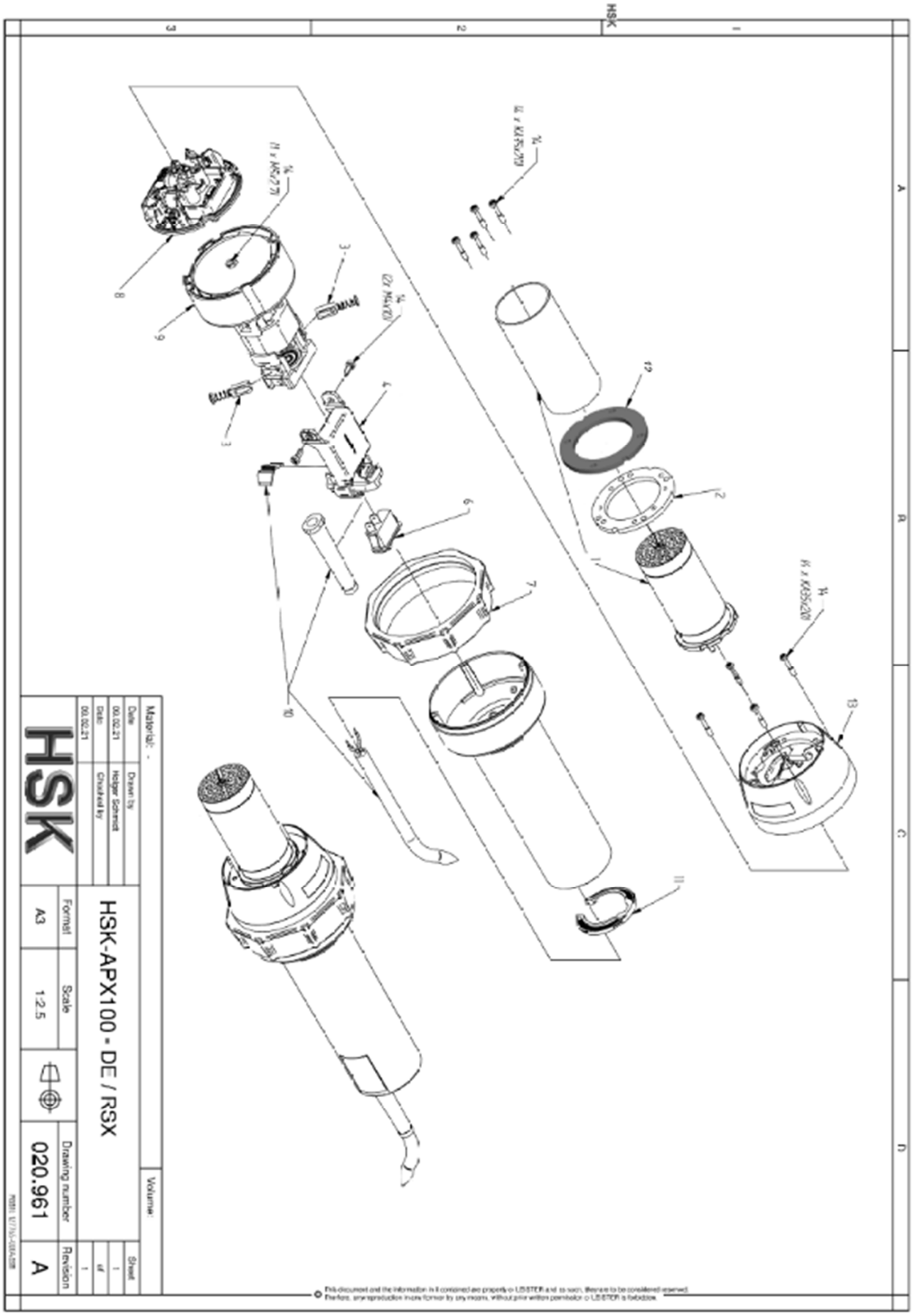

drawing-Nr 020.961A (HSK-APX100 RSX)

1	110159	Heating element 230V/2200W, Ersatzteil (type C)
1	110207	Isolation between Heating element and tube for APX100 Ø 47.6 x 95mm
2	110278	seal Ø 70/48 x 4
3	110167	brushes
6	125.556	switch
7	125.804	rubberband
8	110329	El. Circuit HCU 47A V01, 230V
9	110182	drive C1-4625 with blower, 230V
11	125.717	Air screen, 2 pcs,
13	125.671	Housing front for APX100
14	125.500	Screw Set (4 srews)
12	110346	Distance ring APX100-E

For the air supply we recommend using our compactor Zirkon DT 4.25. The air generated by this device is much more cleaner and drier compared to compressed air generated by normal compressors. Furthermore, the energy costs involved represent only a small portion of the production costs of compressed air.

12. Special accessories

- diverse pipe burner prolongations and sheet dies

- portable air compactor (400 l/min., 1 bar) to operate air heater

- complete welding nozzle programme for sheet width from 5 mm to 40 mm, suitable for fillet, V and corner welds

- welding nozzle blanks with the following dimensions:

50 mm * 30 mm
52 mm * 40 mm
70 mm * 72 mm

special dimensions on request

- welding nozzle preheating
- handle with angle adaptation

Please contact your retailer for further accessories or get in direct contact with HSK.

HSK Kunststoff Schweißtechnik GmbH
Zilzkreuz 1
53604 Bad Honnef
Germany

Tel.: (+49) 02224 - 9017502
E-Mail: info@hsk-kunststoff.de
http://www.hsk-kunststoff.de

13. wiring diagram

HSK Kunststoff Schweisstechnik GmbH
HSK plastic Welding technology

Handschweißextruder
manual welding extruder

Manufacturer (company)

HSK Kunststoff Schweißtechnik GmbH

Zilzkreuz 1
53604 Bad-Honnef
Germany
Phone. +49 2224-901 7502

www.HSK-Kunststoff.de

Creator	: HSK	
Last Modification	: 20.08.2025	
Typ	:	HSK35 RSX
power supply	:	230V / 50Hz
Job number	:	SN20150221

Frm_DKB_HSK_1

Creator : HSK	Last creator : HSK	HSK 35 RSX	Title page / Deckblatt	=M	+INH
Date of creation : 20.08.2025	Last Modification: 20.08.2025	SN20150221		Page : 0	of : 4
back cover :				Next page 1	

contents table / Inhaltsverzeichnis

Page	page Description	date	editor	X
=M+INH/0	Title page / Deckblatt	12.05.2015	ASS	X
=M+INH/1	Contens table	15.06.2015	ASS	
=M+K1/2	Heating Extruder / Heizung Extruder	09.06.2015	ASS	
=M+K1/3	Air heater / Luftbeheizung	15.06.2015	ASS	

Column X: An automatically generated page was edited manually

Creator : HSK Date of creation : 20.08.2025 back cover : 0	Last creator HSK Last Modification: 20.08.2025	HSK 35 RSX SN20150221 .	HSK	Contens table
=M +INH Page : 1 of : 4 Next page +K1/2				

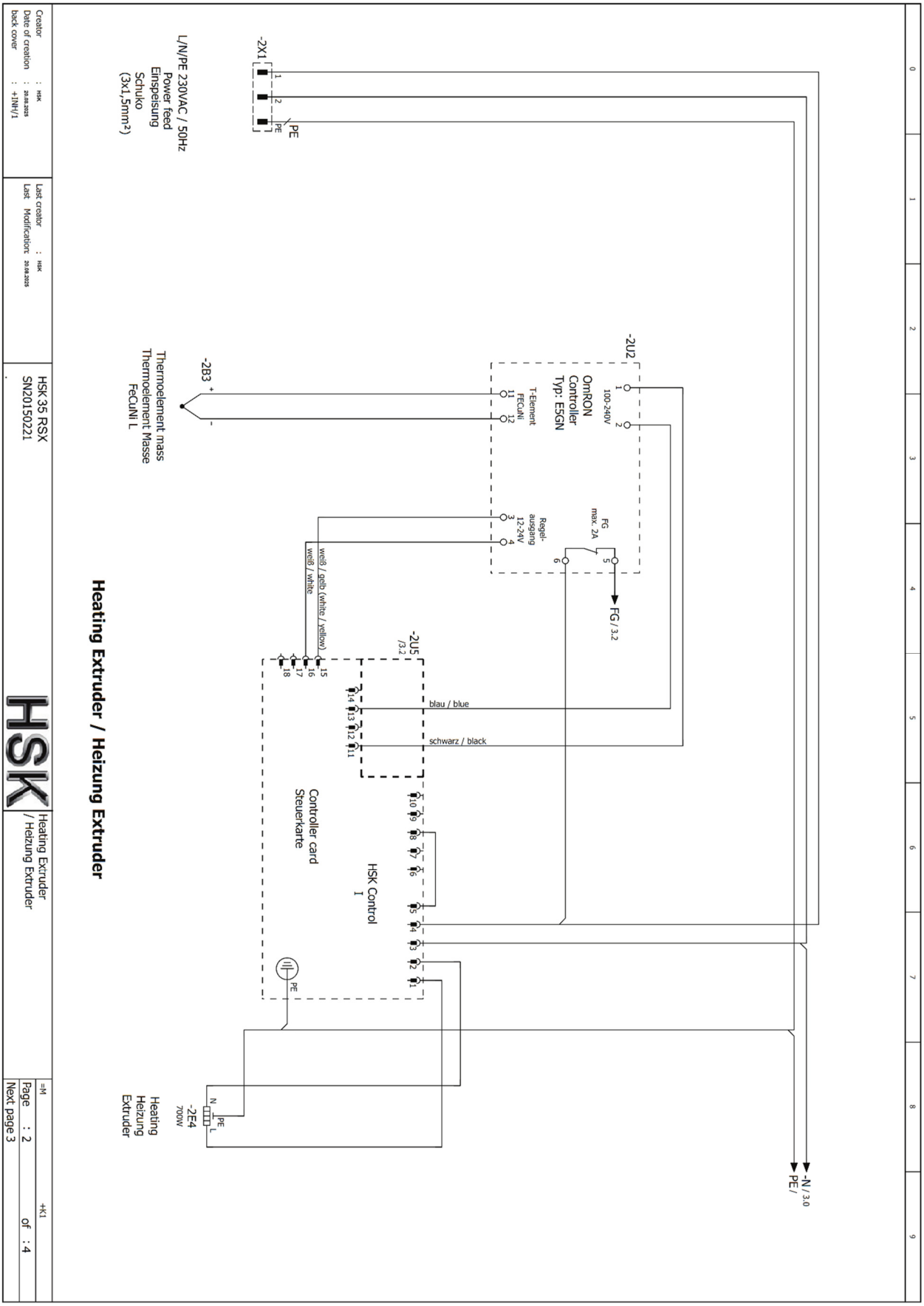
Heating Extruder / Heizung Extruder
L/N/PE 230VAC / 50Hz
Power feed
Einspeisung
Schuko
(3x1,5mm²)
-2X1
PE
-2U2
OmRON
Controller
Typ: E5GN
100-240V
T-Element
FeCuNi
Regel-
ausgang
12-24V
FG
max. 2A
FG / 3.2
-N / 3.0
PE /
-2B3
Thermoelement mass
Thermoelement Masse
FeCuNi L
weiß / gelb (white / yellow)
weiß / white
-2U5
/3.2
blau / blue
schwarz / black
HSK Control
I
Controller card
Steuerkarte
-2E4
700W
Heating
Heizung
Extruder
Creator : HSK
Date of creation : 20.08.2025
back cover : +1N+/1
Last creator : HSK
Last Modification : 20.08.2025
HSK 35 RSX
SN20150221
Heating Extruder
/ Heizung Extruder
=M
+K1
Page : 2 of : 4
Next page 3

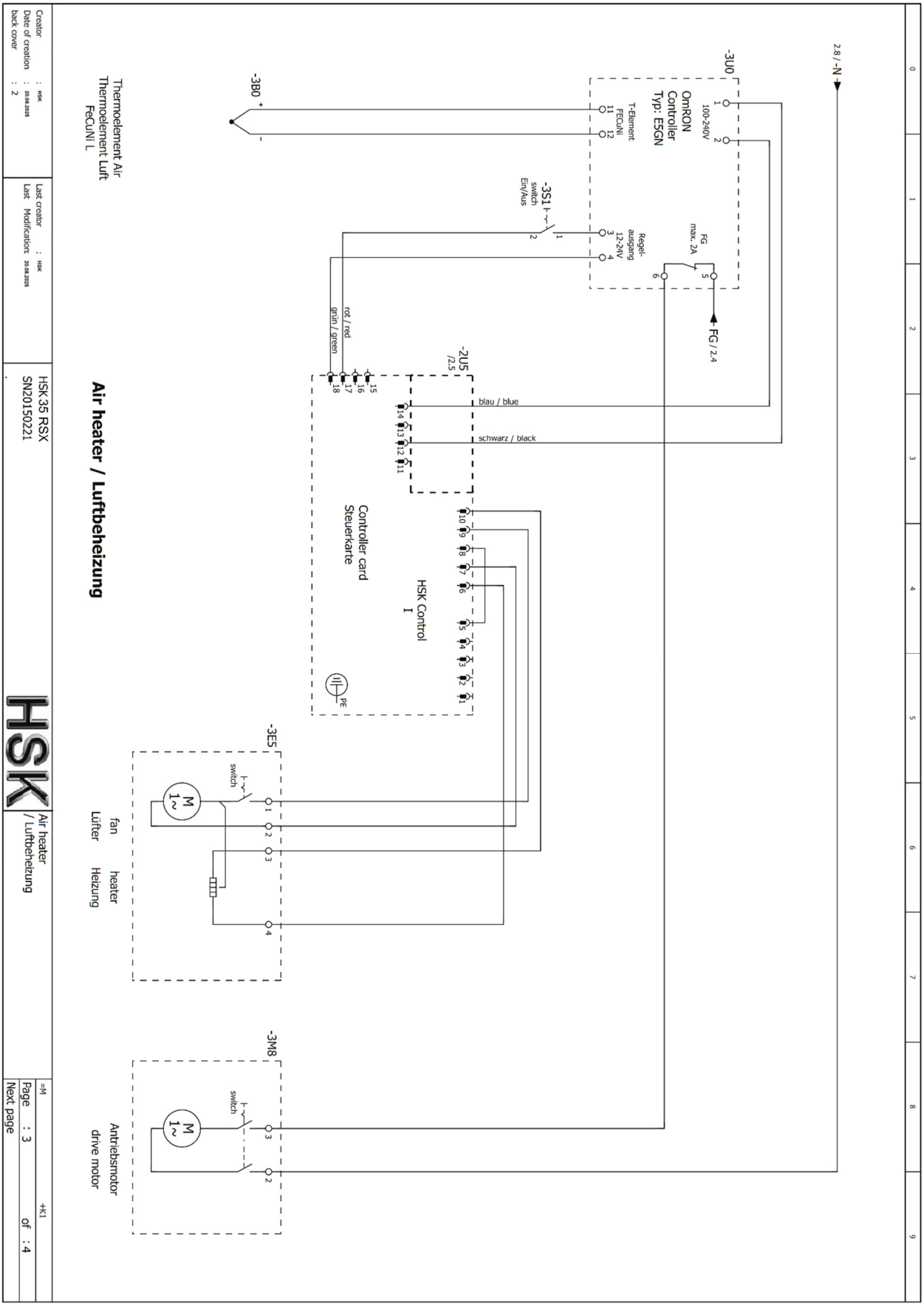
2.8 / -N
-3U0
100-240V
OmRON
Controller
Typ: E5GN
T-Element
FeCuNi
Regel-
ausgang
12-24V
FG
max. 2A
FG / 2.4
-3S1
switch
Ein/Aus
-3B0
Thermoelement Air
Thermoelement Luft
FeCuNi L
rot / red
grün / green
-2U5
/2.5
blau / blue
schwarz / black
HSK Control
I
Controller card
Steuerkarte
PE
-3E5
switch
fan
Lüfter
heater
Heizung
-3M8
switch
Antriebsmotor
drive motor
Air heater
/ Luftbeheizung
HSK 35 RSX
SN20150221
Creator : HSK
Date of creation : 20.08.2025
back cover : 2
Last creator : HSK
Last Modification : 20.08.2025
=M
+K1
Page : 3
of : 4
Next page

14. Declaration of conformity according to EG regulation 2004/108/EG, 2011/65/EU and 2006/95/EG

The manufacturer: HSK Kunststoff Schweißtechnik GmbH

Zilzkreuz 1
D-53604 Bad Honnef
Germany

herewith declares that the product

Name of product: hand welding extruder

Machine types: HSK35 RSX

to which refers this declaration complies with the general security and health requirements set forth in the EG regulation 2004/108/EG,2011/65/EU und 2006/95/EG

For the realization of these security and health requirements of the EG-regulations the following standards were also applied:

EMV: EN 55014-1:2006
EN 55014-2:2006
EN 61000-3-3
EN 61000-3-2

Safety: EN 349

Schallleistungspegel LWA 91,4 dB
Messunsicherheit des Messwertes KWA 5dB

Vibrationswert 1 αhv 3-Weg αh,D 2.4 m/s²
Messunsicherheit des Messwertes Kα 1,5 m/s²

Bad Honnef, in August 2025

Holger Schmidt
(General manager)

Zubehör Schweißtechnik

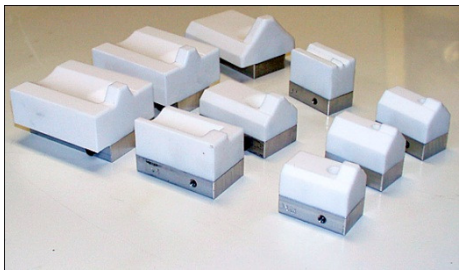

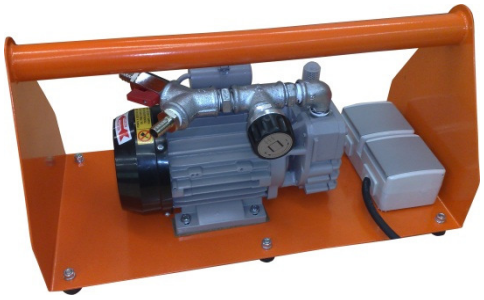

Schweißschuhe

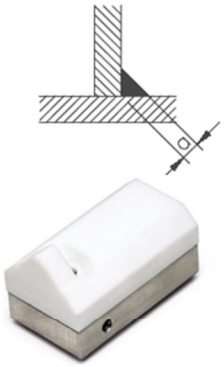

Kehlnaht , *T butt weld*

Art.Nr. *Art.No.*	Plattendicke *Thickness*	Schweißschuh *Welding shoe*
400035	5	A-3,5
400011	8	A-5,6
400007	10	A-7
400037	12	A-8,4
01040	15	A-10,5
400003	20	A-14
400012	25	A-17,5
400074	30	A-21
400107	35	A-24,5
400136	40	A-28

V Naht , *V butt weld*

Art.Nr. *Art.No.*	Plattendicke *Thickness*	Schweißschuh *Welding shoe*
400036	5	V 5
400018	8	V 8
400008	10	V 10
400025	12	V 12
01041	15	V 15
400004	20	V 20
400022	25	V 25
400061	30	V 30
400108	35	V 35

Eck-Naht , *Corner butt weld*

Art.Nr. *Art.No.*	Plattendicke *Thickness*	Schweißschuh *Welding shoe*
400024	5	E 5
400057	8	E 8
400009	10	E 10
400019	12	E 12
400063	15	E 15
400020	20	E 20
400021	25	E 25

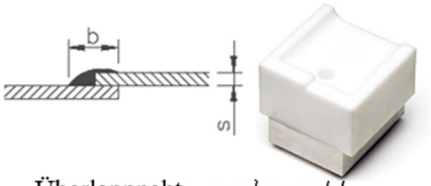

Überlappnaht , *overlap weld*

Art.Nr. *Art.No.*	Plattendicke *Thickness*	Schweißschuh *Welding shoe*
400014	2	U 2
400015	2,5	U 2,5
400059	3	U 3
400030	5	U 5
400135	6	U 6
400058	8	U 8
400109	10	U 10
400062	15	U 15

Art.Nr. *Art.No.*	Schweißschuhrohling *Nozzle blank*
400001	30 x 50 mm
400002	40 x 52 mm
400006	70 x 70 mm

Art.Nr. *Art.No*	Schweißschuh rund *Nozzle round*
400032	20 mm
400031	30 mm
100040	40 mm